Johannesburg Branch
MIMIC COMPONENTS
Cape Town Branch
Mimic Cape

MULTISPAN

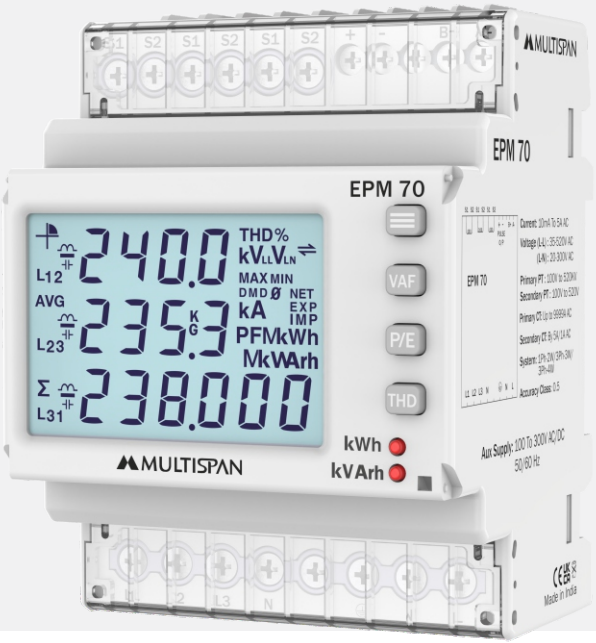

MULTI FUNCTION METER
PREMIUM POWER & ENERGY
EPM-70

APPLICATIONS

- Energy Management System
- DG Set Panels
- LT / HT Panel
- Power Control Center Panels
- Motor Control Center Panels

Mechanical Dimensions

Body Dimensions

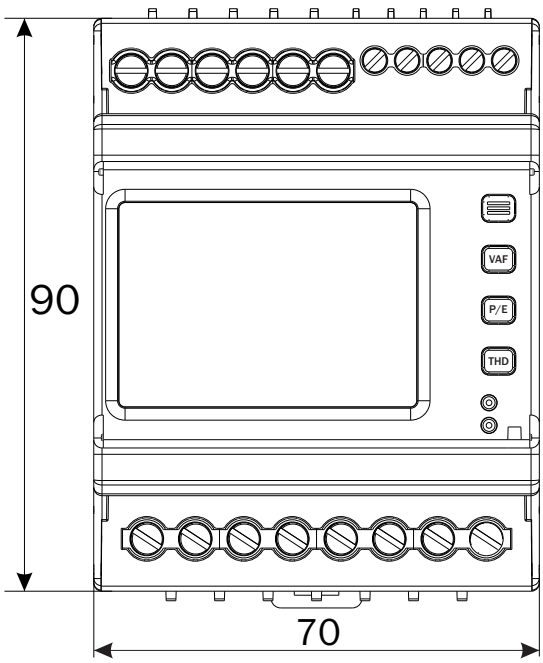

FRONT VIEW

All dimensions are in mm

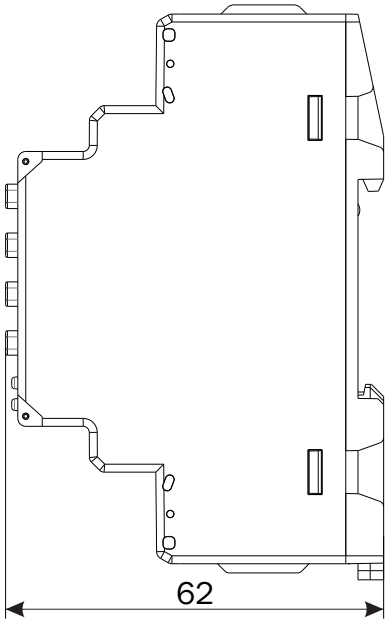

RIGHT SIDE VIEW

Connection Diagram

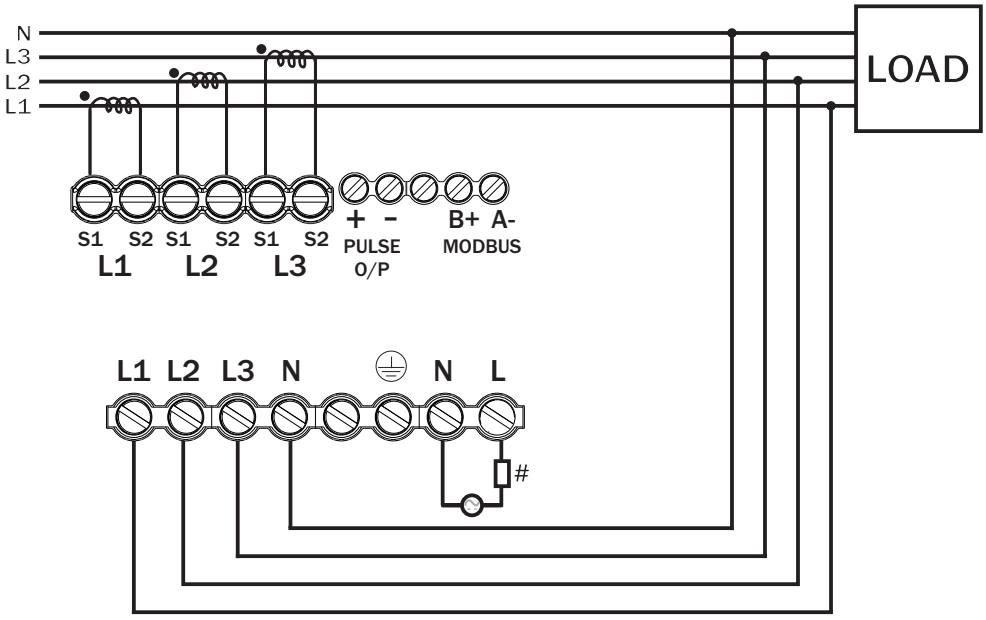

Proper conclusion about energy consumption and power quality can only be made through measurements that extend beyond the feed point. To locate disturbances or energy wasters, data must be recorded at multiple points in the network, the granularity (resolution) of the measurement is key. The new AVH series is an ideal solution for this task. It is suitable for measuring and controlling electrical variables, energy consumption as well as monitoring the power quality parameters, such as harmonics. It is used in energy distribution systems, for example, to record cost centres and monitor thresholds.

Harmonics Measurement

- THD measurement For Voltage And Current, Up to 32 Harmonic.

Demand Measurement

- For Active Power.
- For Apparent Power.
- Display Of Minimum and Maximum Values.

Complete Energy Measurement

- Import Active Energy.
- Export Active Energy.
- NET Active Energy.
- Total Active Energy.
- Total Apparent Energy.
- Import Reactive Energy.
- Export Reactive Energy.
- Lag & Lead Reactive Energy.
- Total Reactive Energy.

MULTISPAN

Input	
Voltage	
Direct Voltage	20 To 300V AC (L-N) 35 TO 520V AC (L-L)
Current	
Secondary Current AC	10mA to 5Amp AC
Primary PT	100V to 520KV
Secondary PT	100V to 520V
Primary CT	Up to 9999A
Secondary CT	By 5A/1A
Voltage THD%	Up to 32 Level
Current THD%	Up to 32 Level
Sampling Rate	164 Sample / Cycle

Meter type
1Φ2W / 3Φ 4W / 3Φ 3W (Selectable)

Display, Keys & LED		
Display	Upper	4 Digit 2 Line 7 seg 0.31"LCD
	Lower	6 Digit 1 Line 7 seg 0.31"LCD
Key		PROG, VAF, P, E, & THD

Auxiliary power supply	
Power Supply	100 to 300V AC/DC,50/60Hz
Compliance for Isolation	Between Power Supply and all Inputs is tested at 2KV for 1 minute

Output	
Pulse Output	Voltage :- External 24V DC Current Capacity :- 25mA Pulse width - 50 to 500ms

Measurement Accuracy	
Accuracy	Class 0.5

Communication	
Interface	RS-485
Baud Rate	2400, 4800, 9600, 19200,38400
Parity	None, Odd, Even
Protocol	Modbus - RTU
Transmission Distance	500 Meter Maximum
Communication address	1 to 125

Environmental Characteristics	
Working Temperature	5 to 50°C
Storage Temperature	5 to 50°C
Relative Humidity	95% RH Non-condensing
Warm up time	5 minutes

Compliance

Applicable EMI / EMC Standards		
Standard : IEC 61326 - 1		
Category		**Standards Compliance**
ESD Immunity	IEC 61000 - 4 - 2	Level IV (Air Discharge : 8kV), (Contact Discharge : 4kV)
Surge Immunity	IEC 61000 - 4 - 5	+ / - 2kV Common Mode, (Line to Ground) + / - 1kV Differential Mode, (Line to Line)
Power Frequency Magnetic Field Test	IEC 61000 - 4 - 8	Range:1 to 100 A/m
Conducted Susceptibility	IEC 61000 - 4 - 6	Level II (3V / m)
Voltage Dips and Interruptions	IEC 61000 - 4 - 11	**Dips** : 0% residual voltage / 1 cycle (Criteria B), 40% residual voltage / 10 cycles 50Hz / 12 cycles 60Hz (Criteria C) 70% residual voltage / 25 cycles 50Hz / 30 cycles 60Hz (Criteria C) **Interruptions** : 0% residual voltage / 250 cycles 50Hz / 300 cycles 60Hz (Criteria C)
Radiated Emission	CISPR - 11	
Electrical Fast Transient	IEC 61000 - 4 - 4	Level III (2kV)
Conducted Emission	CISPR - 11	

Product Variant

Part Code	Network	Input	Output	Aux Supply
EPM 70-E5-00	1Ø2W,3Ø3W/4W	20V-300V AC (L-N), 35-520V AC (L-L)	Pulse O/P	100-300V AC/DC
EPM 70-M1-E5-00	1Ø2W,3Ø3W/4W	20V-300V AC (L-N), 35-520V AC (L-L)	Pulse O/P, RS-485	100-300V AC/DC