Johannesburg Branch
MIMIC COMPONENTS
Cape Town Branch
Mimic Cape

Wireless LED Steady/ Flashing Tower Light

QTG60ML-WIZ

IP54 | IP65 | +50°C -30°C | BUZZER | 85dB | NPN | RoHS | WIRELESS

Can remotely monitor and control the status of tower lights using a PC or smartphone

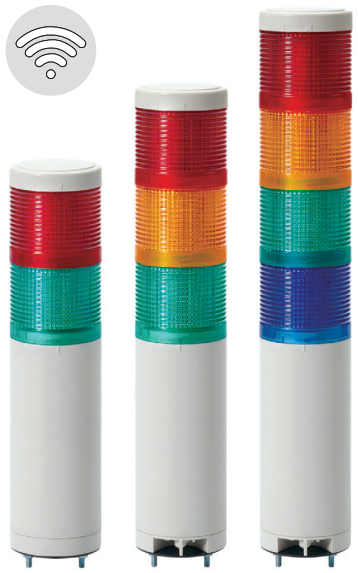

QTG60ML-WIZ Series

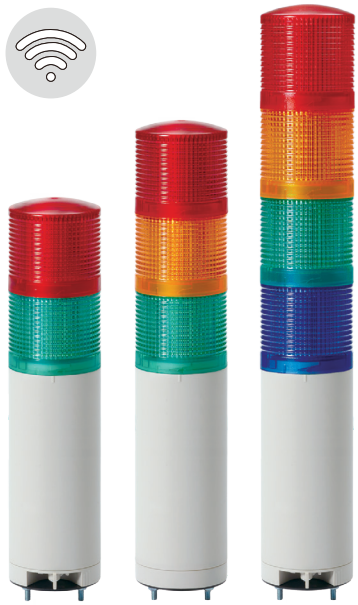

QTGA60ML-WIZ Series

PRODUCT SPECIFICATION

QTG60(M)L-WIZ
QTG70(M)L-WIZ

Materials Lens-PC, Housing-ABS
Ambient operating temperature -30°C to +50°C
Volume Max. 85dB at 1m
Protection rating IP54/IP65
Compliant with RoHS directive

- Allows you to build an advanced production network system with a low cost
- Uses a Mesh Topology that operates in 2.4 GHz Short-Range wireless technology which ensures the communication reliability in harsh environments
- Multi-hop function of the signaling device enables a stable long-distance communication(with up to 100M between devices)
- Cost-effective by requiring no additional cable when change the layout of production lines
- Wireless communication protocol : Zigbee(IEEE802.15.4)

QTG60ML-WIZ Ø60mm Direct Mount, LED Steady/Flashing Type

Model number	Layers	Voltage	Certificates	Weight	Color
QTG60ML-WIZ Steady QTG60ML-WIZ-BZ Steady w/built-in buzzer QTG60MLF-WIZ Steady/Flashing QTG60MLF-WIZ-BZ Steady/Flashing w/ built-in buzzer QTGA60ML-WIZ Steady QTGA60ML-WIZ-BZ Steady w/built-in buzzer QTGA60MLF-WIZ Steady/Flashing QTGA60MLF-WIZ-BZ Steady/Flashing w/ built-in buzzer	1	DC12V DC24V AC110V-220V	KC CE FC	0.32kg 0.32kg 0.36kg	R-Red
	2	DC12V DC24V AC110V-220V		0.37kg 0.37kg 0.41kg	R-Red G-Green
	3	DC12V DC24V AC110V-220V		0.42kg 0.42kg 0.46kg	R-Red A-Amber G-Green
	4	DC12V DC24V AC110V-220V		0.47kg 0.47kg 0.51kg	R-Red A-Amber G-Green B-Blue
	5	DC12V DC24V AC110V-220V		0.52kg 0.52kg 0.56kg	R-Red A-Amber G-Green B-Blue W-White

※ AC type model has a free-voltage range of 100V-240V
※ KC Certification: DC24V, CE RED compliant: DC24V, AC110V-220V, FCC Complaint: DC24V, AC110V-220V

Light source/buzzer current(based on 1 layer)

Voltage	DC12V	DC24V	AC110V-220V
Light source current(1 layer)	130mA	85mA	Max.65mA
Buzzer current	35mA	30mA	Max.40mA

Customization

- High volume buzzer option can be fitted to the top of the product(Lens should be within 4 layers)
- Wall mount bracket options : Bracket structure allows for threading through the bracket hole or into the wall mount

Wall mount bracket TWS45

Wall mount bracket TWA45

Wiring Instructions

- External power line
  UL1015 AWG18(0.75sq) x 2C 400mm
- External signal line
  UL1007 AWG22(0.3sq) 400mm
- LED tower light can be wiring with External Contact and transistor

Ordering Specification

QTG60ML-WIZ	-	3	-	110/220	-	RAG
[Model number]		[Layers]		[Voltage]		[Color]
QTG60ML-WIZ QTG60ML-WIZ-BZ QTG60MLF-WIZ QTG60MLF-WIZ-BZ QTGA60ML-WIZ QTGA60ML-WIZ-BZ QTGA60MLF-WIZ QTGA60MLF-WIZ-BZ		1-1 Layer 2-2 Layers 3-3 Layers 4-4 Layers 5-5 Layers		12-DC12V 24-DC24V 110/220-AC110V-220V		R-Red A-Amber G-Green B-Blue W-White

QTG60L-WIZ

IP54 | IP65 | +50℃ -30℃ | BUZZER | 85dB | NPN | RoHS | WIRELESS

QTG60L-WIZ Ø60mm Pole mount, LED Steady/Flashing Type

Model number	Layers	Voltage	Certificates	Weight	Color
QTG60L-WIZ Steady QTG60L-WIZ-BZ Steady w/built-in buzzer QTG60LF-WIZ Steady/Flashing QTG60LF-WIZ-BZ Steady/Flashing w/ built-in buzzer QTGA60L-WIZ Steady QTGA60L-WIZ-BZ Steady w/built-in buzzer QTGA60LF-WIZ Steady/Flashing QTGA60LF-WIZ-BZ Steady/Flashing w/ built-in buzzer	1	DC12V DC24V AC110V-220V	KC CE FC	0.50kg 0.50kg 0.53kg	R-Red
	2	DC12V DC24V AC110V-220V		0.55kg 0.55kg 0.58kg	R-Red G-Green
	3	DC12V DC24V AC110V-220V		0.60kg 0.60kg 0.63kg	R-Red A-Amber G-Green
	4	DC12V DC24V AC110V-220V		0.65kg 0.65kg 0.68kg	R-Red A-Amber G-Green B-Blue
	5	DC12V DC24V AC110V-220V		0.70kg 0.70kg 0.73kg	R-Red A-Amber G-Green B-Blue W-White

※ AC type model has a free-voltage range of 100V-240V

※ KC Certification: DC24V, CE RED compliant: DC24V, AC110V-220V, FCC Complaint: DC24V, AC110V-220V

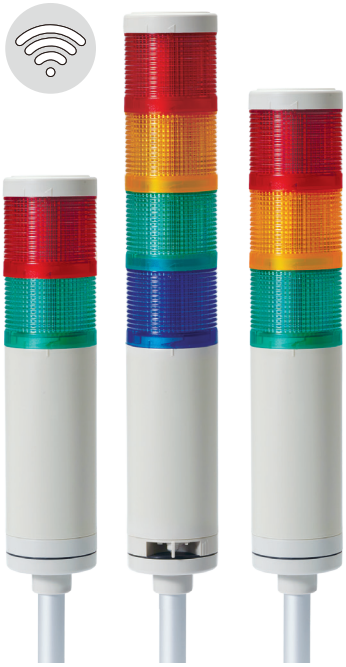

QTG60L-WIZ Series

Light source/buzzer current(based on 1 layer)

Voltage	DC12V	DC24V	AC110V-220V
Light source current(1 layer)	130mA	85mA	Max.65mA
Buzzer current	35mA	30mA	Max.40mA

Wiring Instructions

- External power line - UL1015 AWG18(0.75sq) x 2C 400mm
- External signal line - UL1007 AWG22(0.3sq) 400mm
- LED tower light can be wired by using transistor and External Contact

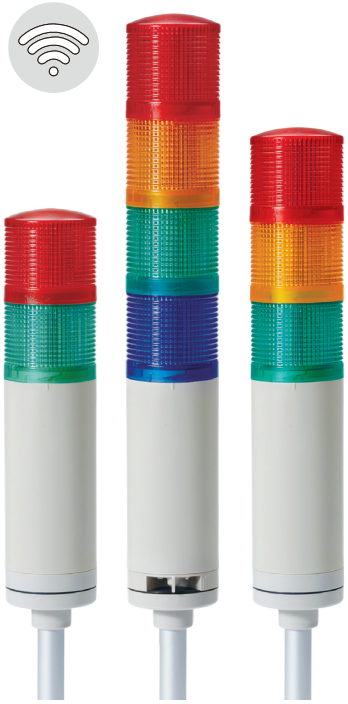

QTGA60L-WIZ Series

Mounting bracket

Standard	LB18	LW18	QZ18	SZ18	QL18	SL18
Steel	Steel	ABS	ABS	Al	ABS	Al

※ Please refer to [Tower Light Mounting bracket] on this catalogue for detailed dimensions

Customization

- Customized pole length available
- High volume buzzer option can be fitted to the top of the product(Lens should be within 4 layers)

Ordering Specification

QTG60L-WIZ	-	3	-	110/220	-	RAG	-	LW18
[Model number] QTG60L-WIZ QTG60L-WIZ-BZ QTG60LF-WIZ QTG60LF-WIZ-BZ QTGA60L-WIZ QTGA60L-WIZ-BZ QTGA60LF-WIZ QTGA60LF-WIZ-BZ		[Layers] 1-1 Layer 2-2 Layers 3-3 Layers 4-4 Layers 5-5 Layers		[Voltage] 12-DC12V 24-DC24V 110/220-AC110V-220V		[Color] R-Red A-Amber G-Green B-Blue W-White		[Bracket] None-Standard Bracket -LB18 -LW18 -QZ18 -SZ18 -QL18 -SL18

Wireless LED Steady/ Flashing Tower Light

QTG70ML-WIZ

IP54 | IP65 | +50℃ -30℃ | BUZZER | 85dB | NPN | RoHS | WIRELESS

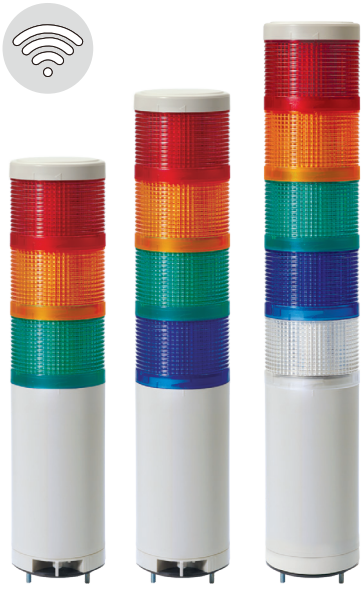

QTG70ML-WIZ Series

QTG70ML-WIZ Ø70mm Direct mount, LED Steady/Flashing Type

Model number	Layers	Voltage	Certificates	Weight	Color
QTG70ML-WIZ Steady QTG70ML-WIZ-BZ Steady w/built-in buzzer QTG70MLF-WIZ Steady/Flashing QTG70MLF-WIZ-BZ Steady/Flashing w/ built-in buzzer QTGA70ML-WIZ Steady QTGA70ML-WIZ-BZ Steady w/built-in buzzer QTGA70MLF-WIZ Steady/Flashing QTGA70MLF-WIZ-BZ Steady/Flashing w/ built-in buzzer	1	DC12V DC24V AC110V-220V	KC CE FC	0.38kg 0.38kg 0.41kg	R-Red
	2	DC12V DC24V AC110V-220V		0.44kg 0.44kg 0.47kg	R-Red G-Green
	3	DC12V DC24V AC110V-220V		0.50kg 0.50kg 0.53kg	R-Red A-Amber G-Green
	4	DC12V DC24V AC110V-220V		0.56kg 0.56kg 0.59kg	R-Red A-Amber G-Green B-Blue
	5	DC12V DC24V AC110V-220V		0.62kg 0.62kg 0.65kg	R-Red A-Amber G-Green B-Blue W-White

※ AC type model has a free-voltage range of 100V-240V

※ KC Certification: DC24V, CE RED compliant: DC24V, AC110V-220V, FCC Complaint: DC24V, AC110V-220V

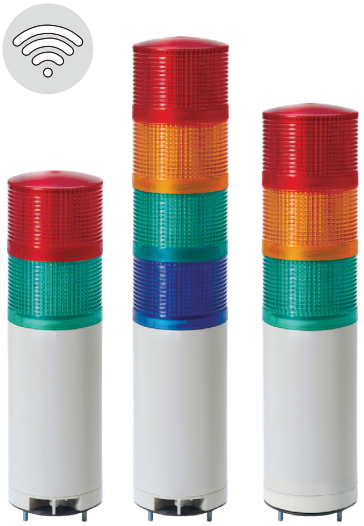

QTGA70ML-WIZ Series

Light source/buzzer current(based on 1 layer)

Voltage	DC12V	DC24V	AC110V-220V
Light source current(1 layer)	130mA	85mA	Max.65mA
Buzzer current	35mA	30mA	Max.40mA

Wiring Instructions

- External power line - UL1015 AWG18(0.75sq) x 2C 400mm
- External signal line - UL1007 AWG22(0.3sq) 400mm
- LED tower light can be wired by using transistor and External Contact

Customization

- High volume buzzer option can be fitted to the top of the product(Lens should be within 4 layers)
- Wall mount bracket options : Bracket structure allows for threading through the bracket hole or into the wall mount

Wall mount bracket TWS80

Wall mount bracket TWA80

Ordering Specification

QTG70ML-WIZ	-	3	-	110/220	-	RAG
[Model number]		[Layers]		[Voltage]		[Color]
QTG70ML-WIZ QTG70ML-WIZ-BZ QTG70MLF-WIZ QTG70MLF-WIZ-BZ QTGA70ML-WIZ QTGA70ML-WIZ-BZ QTGA70MLF-WIZ QTGA70MLF-WIZ-BZ		1-1 Layer 2-2 Layers 3-3 Layers 4-4 Layers 5-5 Layers		12-DC12V 24-DC24V 110/220-AC110V-220V		R-Red A-Amber G-Green B-Blue W-White

QTG70L-WIZ

IP54 | IP65 | +50℃ -30℃ | BUZZER | 85dB | NPN | RoHS | WIRELESS

QTG70L-WIZ Ø70mm Pole Mount, LED Steady/Flashing Type

Model number	Layers	Voltage	Certificates	Weight	Color
QTG70L-WIZ Steady QTG70L-WIZ-BZ Steady w/built-in buzzer QTG70LF-WIZ Steady/Flashing QTG70LF-WIZ-BZ Steady/Flashing w/ built-in buzzer QTGA70L-WIZ Steady QTGA70L-WIZ-BZ Steady w/built-in buzzer QTGA70LF-WIZ Steady/Flashing QTGA70LF-WIZ-BZ Steady/Flashing w/ built-in buzzer	1	DC12V DC24V AC110V-220V	KC CE FC	0.60kg 0.60kg 0.63kg	R-Red
	2	DC12V DC24V AC110V-220V		0.66kg 0.66kg 0.69kg	R-Red G-Green
	3	DC12V DC24V AC110V-220V		0.72kg 0.72kg 0.75kg	R-Red A-Amber G-Green
	4	DC12V DC24V AC110V-220V		0.78kg 0.78kg 0.81kg	R-Red A-Amber G-Green B-Blue
	5	DC12V DC24V AC110V-220V		0.84kg 0.84kg 0.87kg	R-Red A-Amber G-Green B-Blue W-White

※ AC type model has a free-voltage range of 100V-240V

※ KC Certification: DC24V, CE RED compliant: DC24V, AC110V-220V, FCC Complaint: DC24V, AC110V-220V

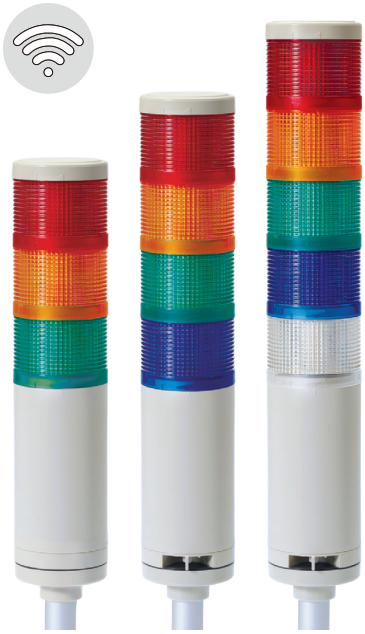

QTG70L-WIZ Series

Light source/buzzer current(based on 1 layer)

Voltage	DC12V	DC24V	AC110V-220V
Light source current(1 layer)	130mA	85mA	Max.65mA
Buzzer current	35mA	30mA	Max.40mA

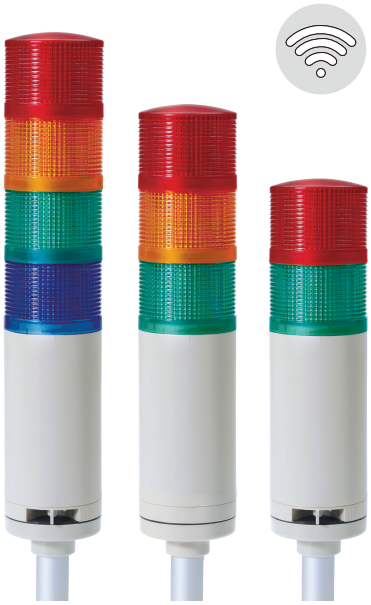

QTGA70L-WIZ Series

Wiring Instructions

- External power line - UL1015 AWG18(0.75sq) x 2C 400mm
- External signal line - UL1007 AWG22(0.3sq) 400mm
- LED tower light can be wired by using transistor and External Contact

Mounting Bracket

Standard	LB24	LW24	QZ24	SZ24	QL24	SL24
Steel	Steel	ABS	ABS	Al	ABS	Al

※ Please refer to [Tower Light Mounting bracket] on this catalogue for detailed dimensions

Customization

- Customized pole length available
- High volume buzzer option can be fitted to the top of the product (Lens should be within 4 layers)

Ordering Specification

QTG70L-WIZ	-	3	-	110/220	-	RAG	-	LW24
[Model number]		[Layers]		[Voltage]		[Color]		[Bracket]
QTG70L-WIZ QTG70L-WIZ-BZ QTG70LF-WIZ QTG70LF-WIZ-BZ QTGA70L-WIZ QTGA70L-WIZ-BZ QTGA70LF-WIZ QTGA70LF-WIZ-BZ		1-1 Layer 2-2 Layers 3-3 Layers 4-4 Layers 5-5 Layers		12-DC12V 24-DC24V 110/220-AC110V-220V		R-Red A-Amber G-Green B-Blue W-White		None-Standard Bracket -LB24 -LW24 -QZ24 -SZ24 -QL24 -SL24

QTG-WIZ Series

Technical Diagram

Units : mm

·QTG60ML(F)-WIZ Series

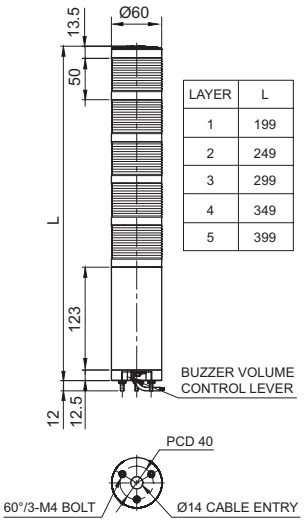

LAYER	L
1	199
2	249
3	299
4	349
5	399

·QTG60L(F)-WIZ Series

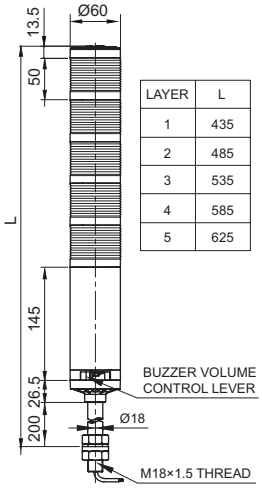

LAYER	L
1	435
2	485
3	535
4	585
5	625

·QTG70ML(F)-WIZ Series

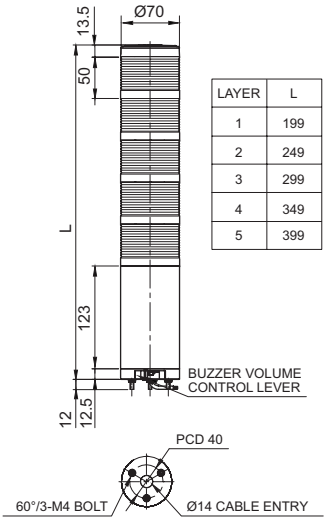

LAYER	L
1	199
2	249
3	299
4	349
5	399

·QTG70L(F)-WIZ Series

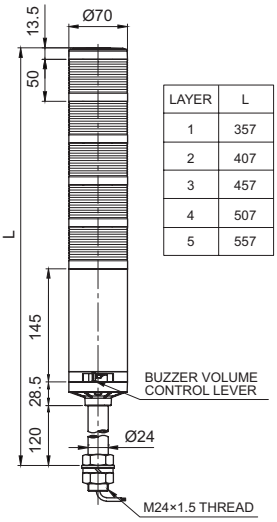

LAYER	L
1	357
2	407
3	457
4	507
5	557

Wiring Instructions

· Please wire the product as followings when you control via wireless network

Connection by USB		
AC/DC Steady/ Flashing	Connection via USB Dongle	Connection via Gateway
QTG60ML(F)-WIZ QTG60L(F)-WIZ QTG70ML(F)-WIZ QTG60L(F)-WIZ	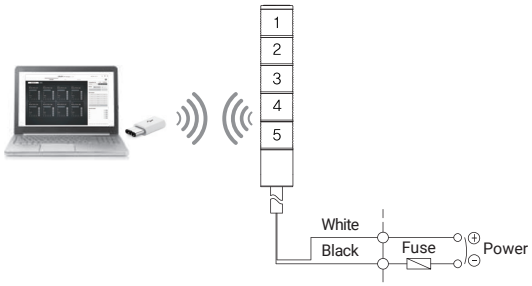	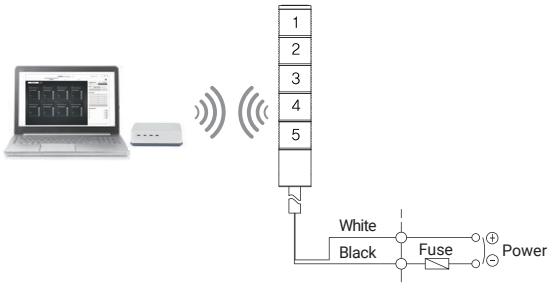

Suitable for single or small-scaled network. Can connect up to 32 devices

Connection by Ethernet	
AC/DC Steady/ Flashing	Connection via Gateway and Ethernet Router
QTG60ML(F)-WIZ QTG60L(F)-WIZ QTG70ML(F)-WIZ QTG60L(F)-WIZ	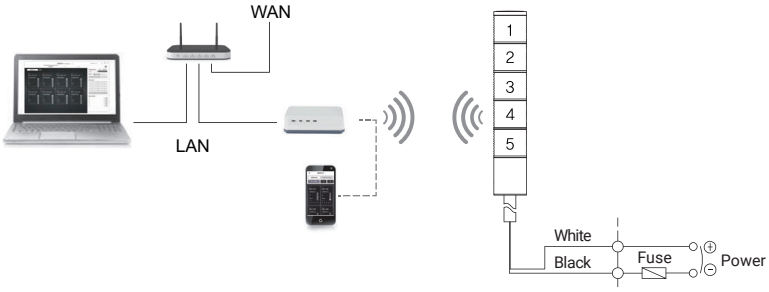

Suitable for large-scaled network. One gateway unit is a single group, can connect up to 24 groups, 768 devices (each group can connect to 32 devices)

· AC steady, AC/DC steady/flashing type cable specification: External power line - UL1015 AWG18(0.75sq) x 2C 400mm

QTG-WIZ Series

Wiring Instructions

· In case of wiring with External Contacts, refer to the wiring diagrams below according to your product's type and voltage setting.
· You can monitor status of tower light and control them via wireless network.

Wiring using external contact

AC/DC Steady	Standard type	Buzzer type
QTG60ML-WIZ QTG60L-WIZ QTG70ML-WIZ QTG70L-WIZ	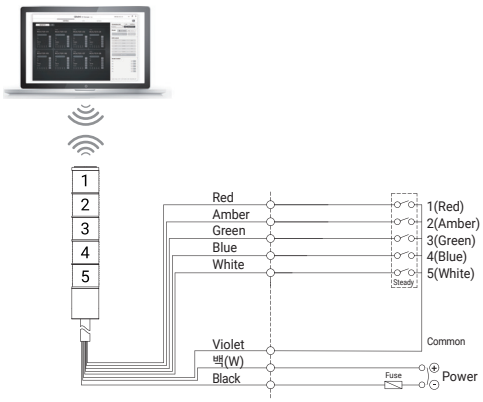	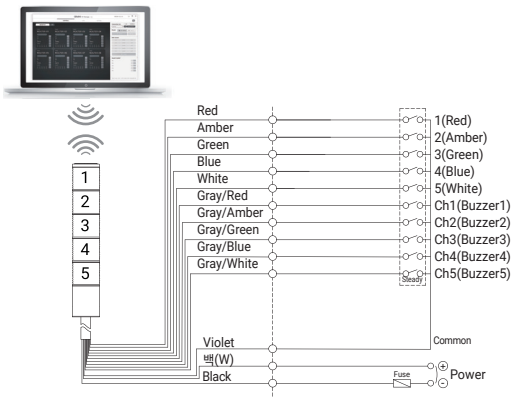
DC Steady/ Flashing	**Standard type**	**Buzzer type**
QTG60MLF-WIZ QTG60LF-WIZ QTG70MLF-WIZ QTG70LF-WIZ	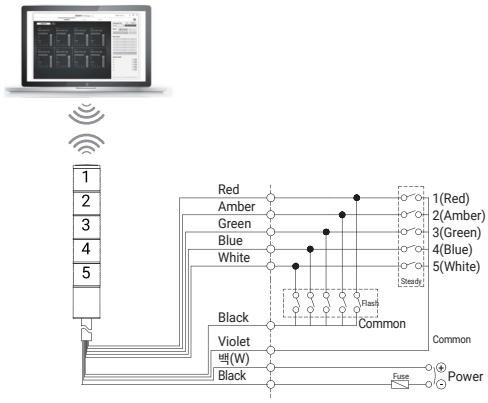	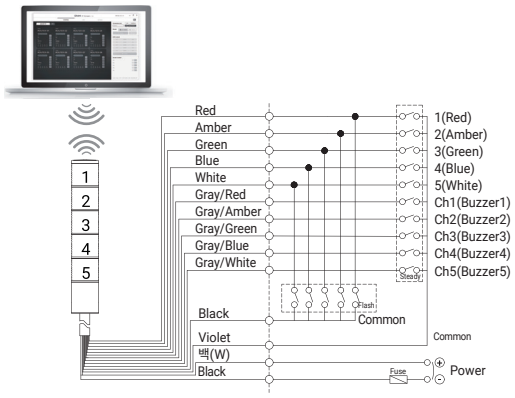
AC Steady/ Flashing	**Standard type**	**Buzzer type**
QTG60MLF-WIZ QTG60LF-WIZ QTG70MLF-WIZ QTG70LF-WIZ	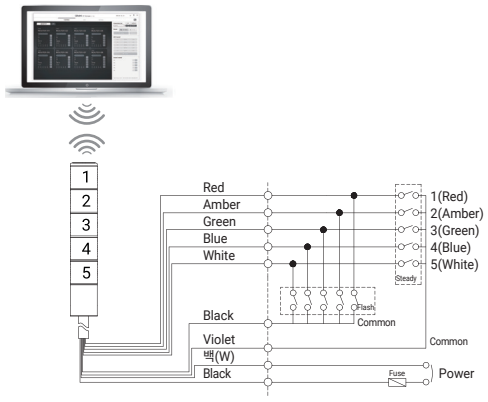	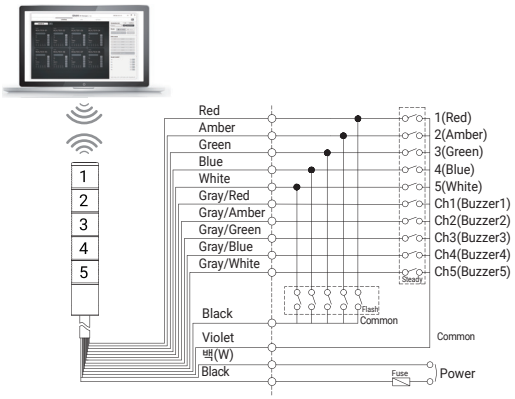

JHB Branch
Mimic Components, Address: 5 Ramsay Street, Booysens, 2091, Johannesburg. Switchboard: +27(0)11-689-5700 | WhatsApp: 071-979-9999
PO Box 38493, Booysens, 2016, Johannesburg, South Africa. Email: info1@mimiccomponents.co.za | Website: www.mimiccomponents.co.za

Cape Branch
Mimic Cape. Address: Unit 41A, Stella Park, 57 Stella Road, Montague Gardens, 7441, Cape Town. Switchboard: +27(0)21-551-8185
WhatsApp: 071-979-9999. Po Box 36955, Chempet, 7442, Cape Town, South Africa. Email: info@mimic-cape.co.za | Website: www.mimic-cape.co.za

Wiring Instructions

· Wiring to transistor, use the NPN transistor. Please wire properly based on wiring instructions below.

Wiring using transistor

AC/DC Steady	Standard type	Buzzer type
QTG60ML-WIZ QTG60L-WIZ QTG70ML-WIZ QTG70L-WIZ	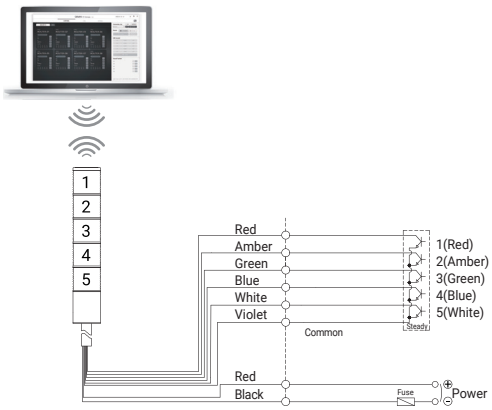	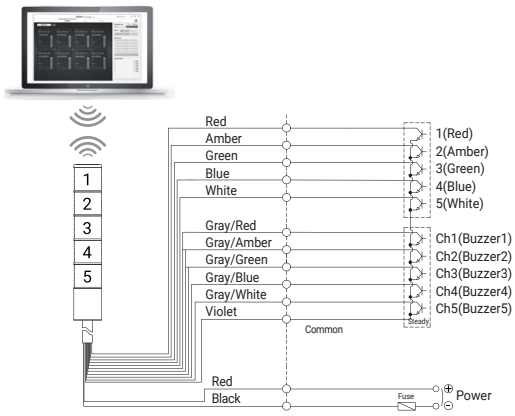
DC Steady/ Flashing	**Standard type**	**Buzzer type**
QTG60MLF-WIZ QTG60LF-WIZ QTG70MLF-WIZ QTG70LF-WIZ	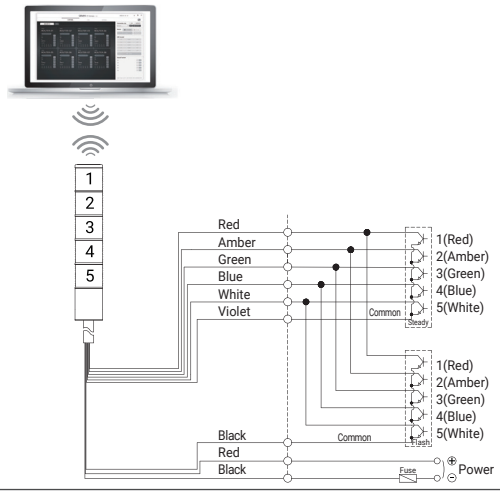	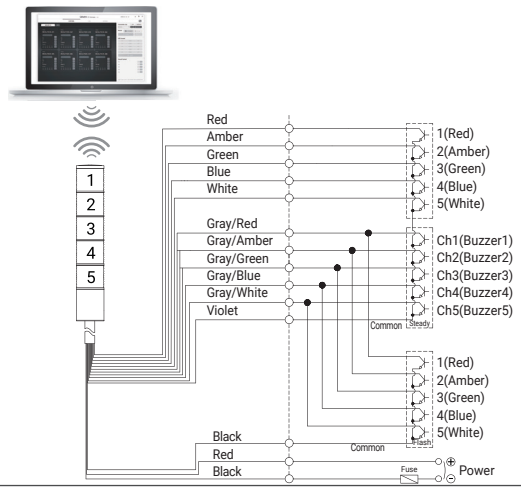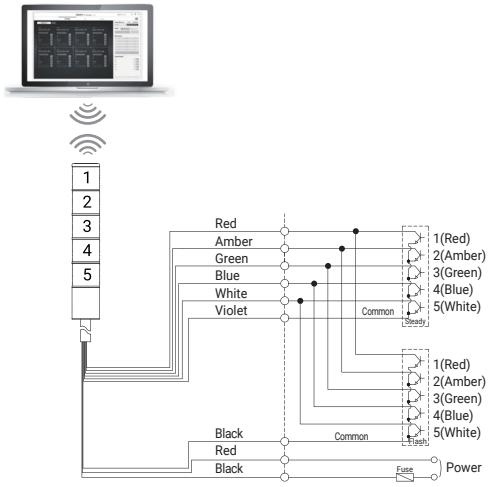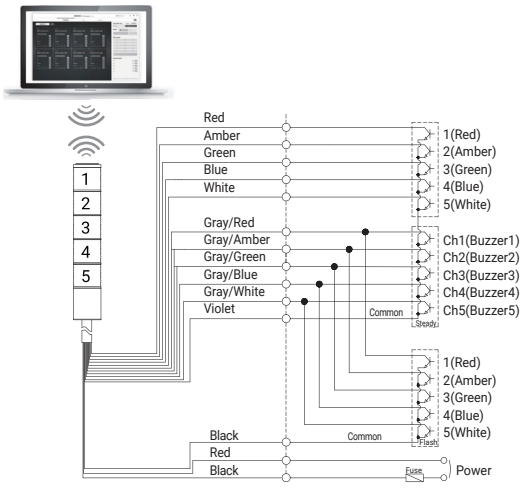
AC Steady/ Flashing	**Standard type**	**Buzzer type**
QTG60MLF-WIZ QTG60LF-WIZ QTG70MLF-WIZ QTG70LF-WIZ